REV	DATE:

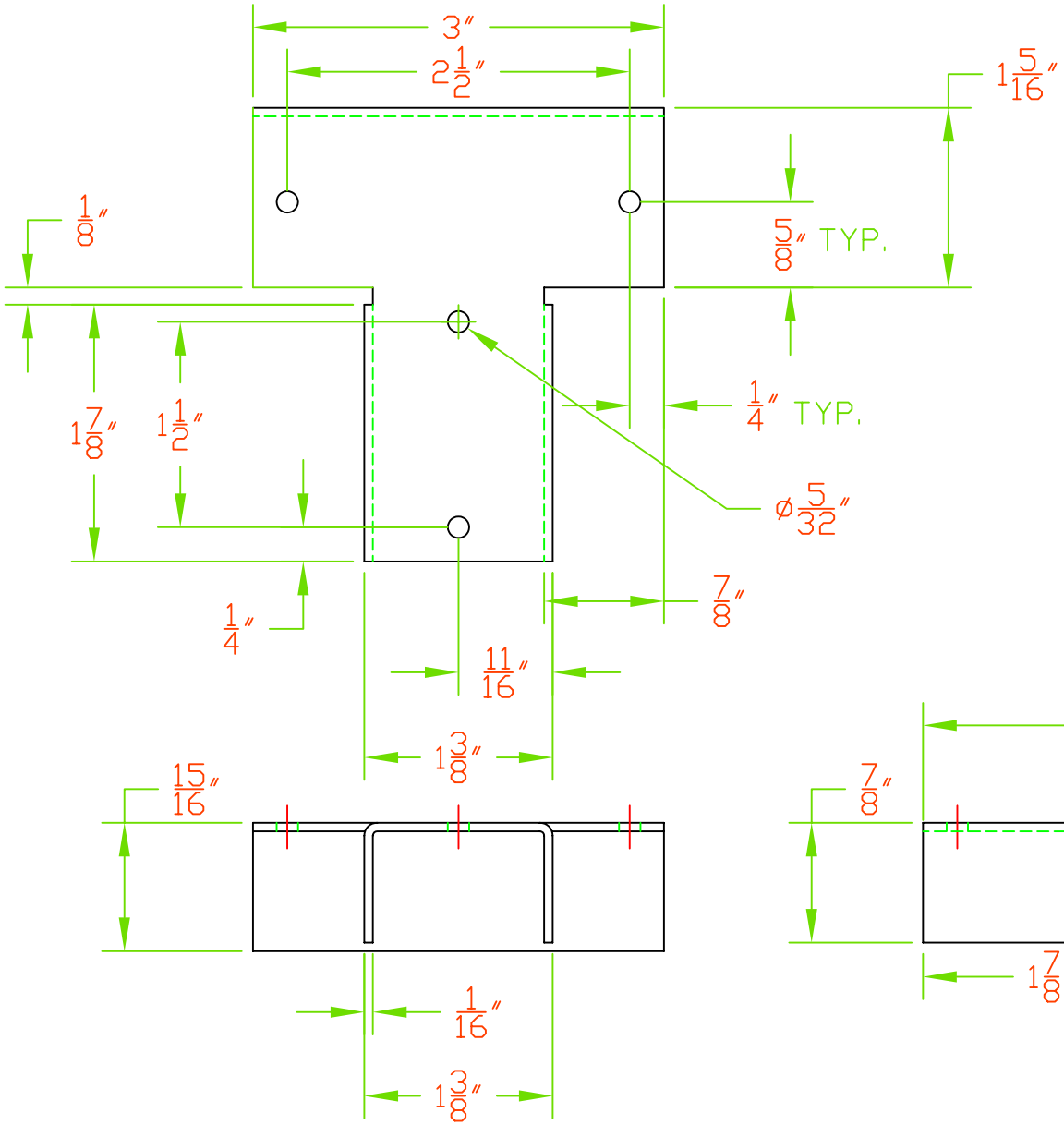

MATERIAL - PLATED FORMED STEEL

FOR USE WITH MODEL 1100 TRACK

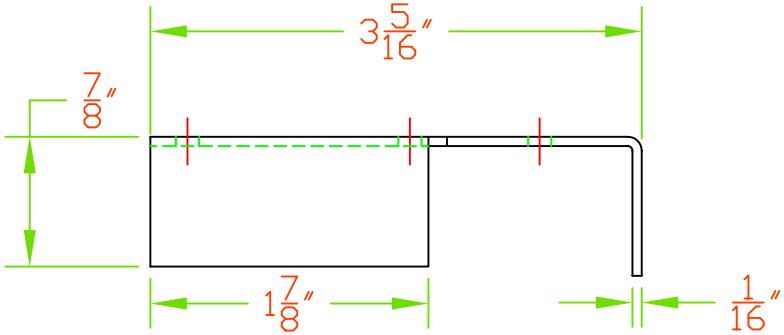

AUTOMATIC DEVICES COMPANY
2121 S. 12TH ST. ALLENTOWN, PA 18103

THIS DRAWING HAS BEEN PREPARED AS A SERVICE TO OUR CUSTOMER AND IS INTENDED ONLY TO BE SUGGESTIVE IN NATURE AND IS NOT TO BE USED AS AN ACTUAL INSTALLATION DRAWING. PREVAILING JOB CONDITIONS AND ACCEPTED PRACTICES MUST BE TAKEN INTO ACCOUNT WHEN THE EQUIPMENT IS INSTALLED.

SIZE	DATE		REV
A	05/10/10	CUBICLE TRACKS	
DRAWN BY	APPROVED BY	DESCRIPTION	
DJL		T-BRACKET	
SCALE 3/4″=1″	SHEET 1 OF 1	DWG NO. P-1175-10	